Please Approve this Drawing	
Date	
Signature	

NO.	Part Nome	Q'TY	Material	Plated surface
1	Plunger	2	C3604	Au 10u" Min. OVER 50~100 U" NI
2	Barrel	2	C3604	Au 5u" Min. OVER 50~100 U" NI
3	Spring	2	SUS 304	N/A
4	Ball	2	SUS 304	ø1.40mm Au 5u" Min. OVER 50~100 U" NI
5	Housing	1	HTN	94V-0, BLACK

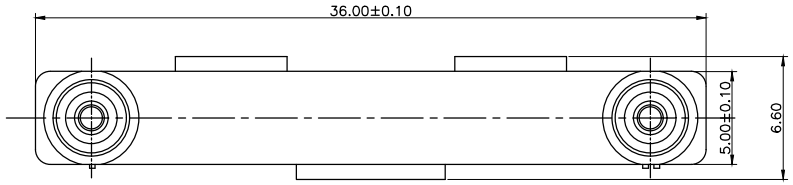

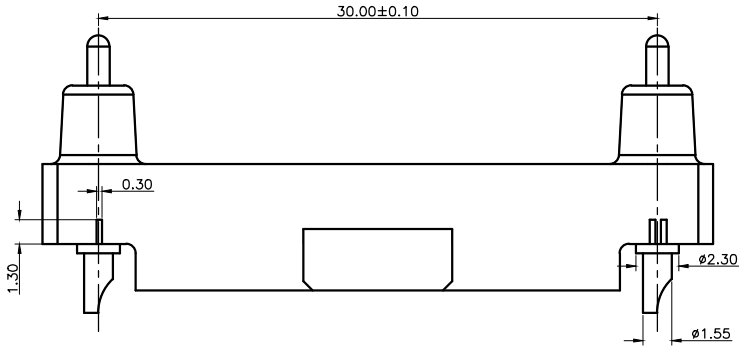

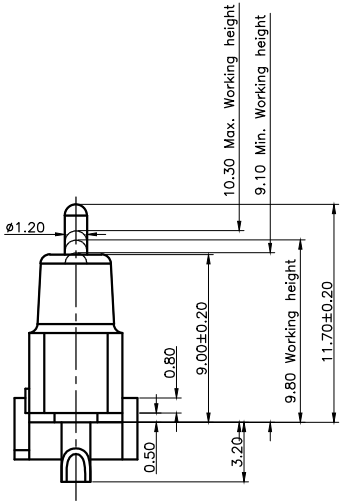

NOTES:

1. Electrical
   .Rated Current & Voltage : DC 12 V ; 3A
   .Contact Resistance: 30 mohm maximum at Working Height(Quiescence)
   .Insulation Resistance: 500MΩ Min. at 500VDC/Minute
   .Dielectric Withstanding Voltage: At 500VAC/Minute No Breakdown
2. Mechanical
   .Spring Force : 110gf±20gf at Normal Working Height
   .Durability:100,000 cycles(minimum)
   .Contact Retention Force:300gf/PIN MIn.
3. Environmental
   .Operating Temperature: -25°C~+85°C
   .Humidity Range: 10%RH~90%RH
   .Salt Spray: 48 Hours
4. Part To Be Free Form Manufacturing Lubricants.
5. When the current is greater than 1A then need to increase the time delay circuit(3 second)
6. To avoid arcing issue, The adaptor start to power supply after connector mated fully.
7. To ensure the best usage,please operate it based on the working height.
8 .RoHs&HF compliant product.

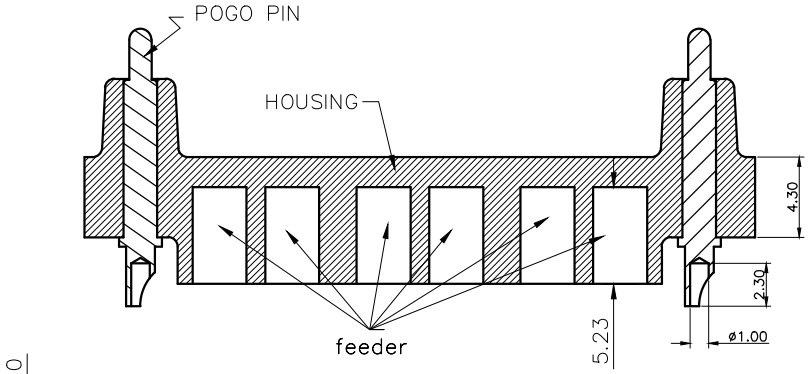

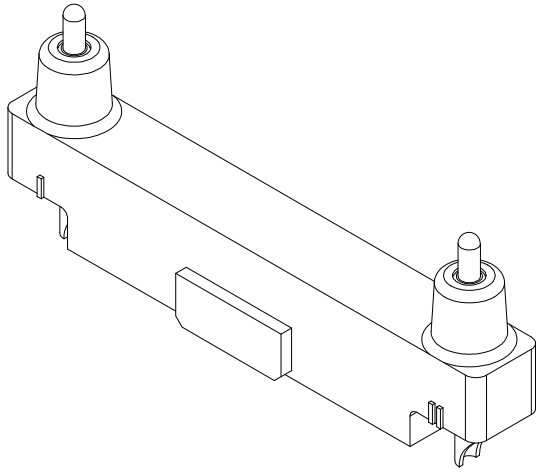

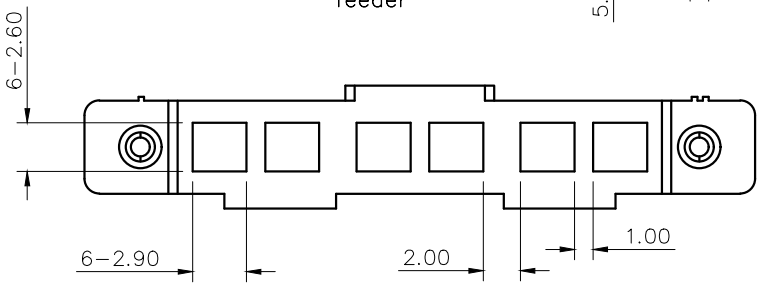

DRAWN	Tony	DATE	2019.08.06			Dongguan Promax Electronics Technology Co., Ltd
CHECKED		SCALE	10:1	VER.	B.1	
APPROVED		TITLE	pogo pin connector.			Ang: 0 ±1° .0 ±0.5° .00 ±0.25° / Dim: 0 ±0.15 .0 ±0.10 .00 ±0.05
PROJECT		DRAWING NO.	C1241-02PB			
SHEET	1 of 1	UNIT	mm			