Please Approve this Drawing	
Date	
Signature	

NO.	Part Name	Q'TY	Material	Plated surface
1	Pin	4	brass	Au 5u" Min. OVER 50U~120" Ni
2	Magnet	2	NdFeB	Ni Plating
3	Housing	1	High temp.Plastic; UL94 V-0 Color Black	
4				

NOTES:
1. Electrical
   .Rated Current & Voltage : DC 12 V ; 3.0A Max.
   .Contact Resistance: 50 mohm maximum
   at Working Height(Quiescence)
2. Environmental
   .Operating Temperature: -40°C~+85°C
   .Humidity Range: 10%RH~90%RH
   .Salt Spray: 48 Hours
3 .RoHs&HF compliant product.

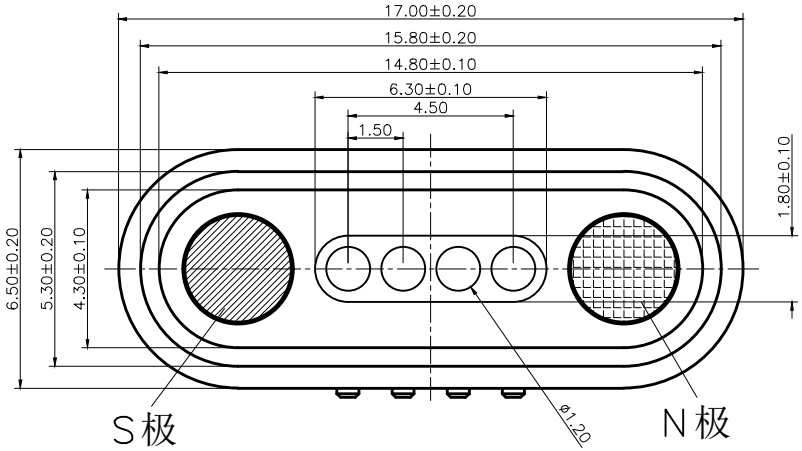

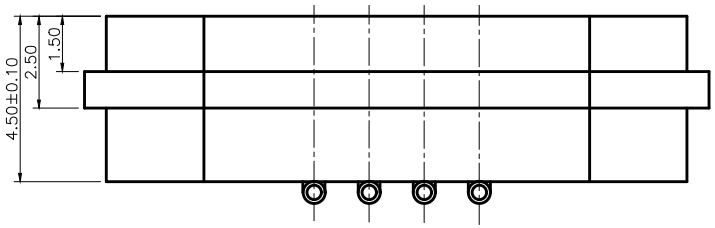

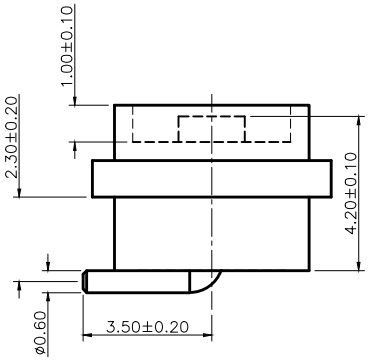

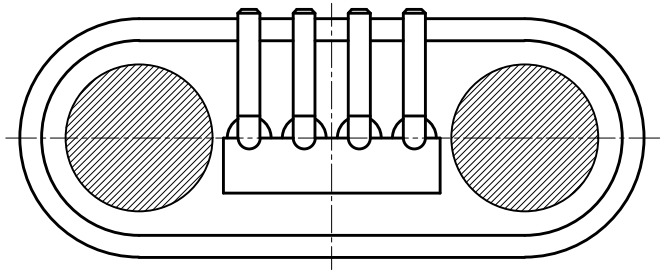

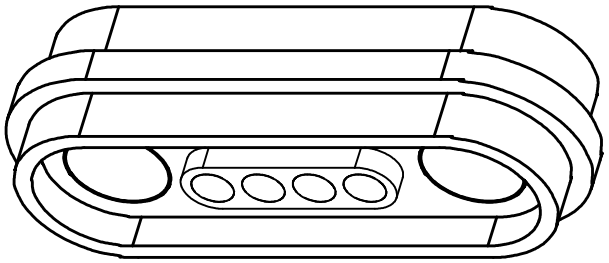

VER.	DESCRIPTION	ECN NO.	DATE

DRAWN	Lys	DATE	2022.05.20		
CHECKED		SCALE	10:1	VER.	A.0
APPROVED		TITLE	Pin		
PROJECT		DRAWING NO.	NF4731-04PA		
SHEET	1 of 1	UNIT	mm		

Dongguan Promax Electronics Technology Co., Ltd

Ang:		Dim:	
0	±1°	0	±0.15
.0	±0.5°	.0	±0.10
.00	±0.25°	.00	±0.05