Please Approve this Drawing	
Date	
Signature	

NO.	Part Nome	Q'TY	Material	Plated surface
1	PIN#1	5	HBi59	Au 30u" Min. Over 50~120u" Ni
2	PIN#2	6	HBi59	Au 10u" Min. Over 50~120u" Ni
3	Housing	1	PA66	UL 94V-0, Black
4	Magnet	3	N52	100u" Min. Ni
5	Shell	1	Al-alloy	100u" Min. Ni
6	Screw(M2.0)	5	Alloy	

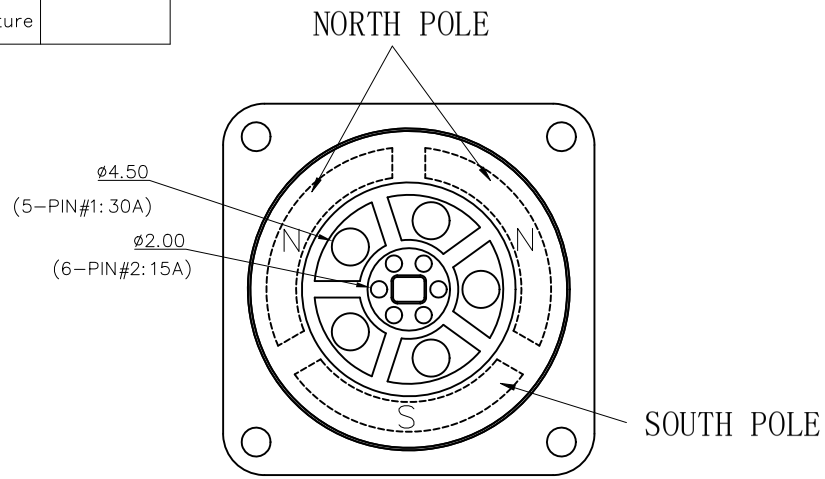

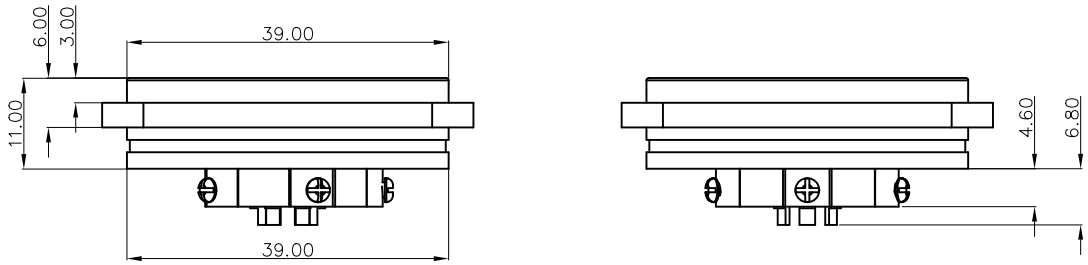

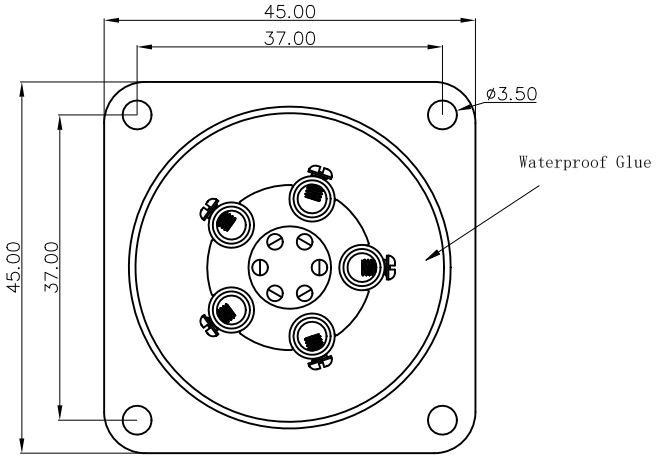

NOTES:
1. Electrical
   Pogo PIN#1:
   .Rated Current & Voltage : DC 380 V ; 30A MAX.
   .Contact Resistance: 50 mohm maximum
   at Working Height(Quiescence)
   Pogo PIN#2:
   .Rated Current & Voltage : DC 380 V ; 15A MAX.
   .Contact Resistance: 50 mohm maximum
   at Working Height(Quiescence)
2. Mechanical
   .Durability: 10,000 cycles(minimum)
3. Male and female docking magnetic force: 2.0kgf MIN.
4. Waterproofing Grade: IP65
5. Environmental
   .Operating Temperature: -25°C~+85°C
   .Humidity Range: 10%RH~90%RH
   .Salt Spray: 48 Hours
6. When the current is greater than 1A then need to increase the time delay circuit(3 second)
7. To avoid arcing issue, The adaptor start to power supply after connector mated fully.
8. To ensure the best usage,please operate it based on the working height.
9 .RoHS&HF compliant product.

DRAWN	lys	DATE	2023.04.07			Dongguan Promax Electronics Technology Co., Ltd.
CHECKED		SCALE	10:1	VER.	A.0	
APPROVED		TITLE	Magnet connector.			Ang: 0 ±1° .0 ±0.5° .00 ±0.25° / Dim: 0 ±0.30 .0 ±0.20 .00 ±0.10
PROJECT		DRAWING NO.	NF5778-11PA			
SHEET	1 of 1	UNIT	mm			

VER.	DESCRIPTION	ECN NO.	DATE